Danterr

T. 1800 262 383 E. sales@danterr.com
F. 03 5561 5499 www.danterr.com

PVC WATERSTOP

PRODUCT DESCRIPTION

Danterr PVC Waterstops lead the way in high technology waterstops and comply to international standards.

PVC Waterstops are extruded from specially compounded PVC in accordance with BS2571.

They are designed for use in water retaining and water excluding structures where a positive seal is required for poured in-situ concrete expansion, construction and contraction joints.

The range of profiles for both centrally and externally placed applications when embedded into the concrete, form a continuous barrier making PVC Waterstops ideal for preventing water penetration.

These profiles are available in rolls with separate intersections supplied to simplify and minimise on-site fabrication.

Concrete structures are only as watertight as the waterstops that join them. PVC Waterstops are designed to allow for expansion, contraction and other movements that can cause joints to open and close.

The efficiency of any waterstop is very dependent on good workmanship and on full compaction of the surrounding concrete. Optimum performance will be achieved if the waterstop is installed by keeping these factors in mind.

ADVANTAGES

- A full range of profiles and sizes to suit all construction requirements
- PVC Waterstops conform to and exceed all major international standards
- High quality compounded PVC for long durability and integrity
- Factory made intersections to simplify and minimise on-site fabrication
- On-site welding equipment is available upon request
- Internal profiles come with factory pre-punched eyelets for easy and secure wire tying to reinforcement
- Ability to withstand high hydrostatic head pressures

AREAS OF APPLICATION

Water retaining structures:

- Water tanks
- Bund walls
- Sewage treatment plants
- Reservoirs
- Dams and spillways
- Water treatment plants
- Swimming pools

Water excluding structures:

- Basement areas
- Underground car parks
- Tunnels
- Retaining walls
- Suspended slabs
- Below ground slabs
- Roof slabs

T. 1800 262 383 E. sales@danterr.com
F. 03 5561 5499 www.danterr.com

PVC WATERSTOP

TECHNICAL FEATURES

COLOUR	Natural
PACKAGING	15m - 20m Rolls
ROLL WEIGHT	Dependent upon profile
STORAGE CONDITIONS/SHELF LIFE	5 years from the date of production if stored properly in original, unopened and undamaged sealed packaging in dry conditions out of direct sunlight at temperatures between +10oC and +25oC
MATERIAL	Polyvinyl Chloride
WELDING TEMPERATURES	Approximately 180oC-200oC

PHYSICAL PROPERTIES

PROPERTY	TEST METHOD	RESULT
Tensile Strength (MPa)	SO 37:2005	13.99
Elongation at Break (%)	ISO 37:2005	325.86
Water Absorbtion at 32oC (%)	ISO 62:2008	0.21
Specific Gravity (g/cm3)	BS 2782-6 Method 620A:1991	1.4045
Hardness, Shore A	ISO 868:2003	82
Thermal Stability (minute)	BS EN 60811-3-2:1995	106
Loss of Mass (g/cm3)	BS EN 60811-3-2:1995	0.004

NOTE: The above test results are from an independent laboratory test report. Project specific material properties can be custom compounded to suit. Material properties can vary between batches.

PROFILE WIDTH SELECTION

The width of waterstop depends on the thickness of the concrete and positioning of the reinforcement. The thickness of the concrete should be greater than or equal to the width of the waterstop profile. Refer to Danterr for further information.

SITE JOINING

Danterr recommends the use of its specialized welding equipment for on-site welding which consists of thermostatically-controlled welding blades and special welding jigs (each type of PVC Waterstop requires its own welding jig to suit the particular shape). On-site joining is a simple exercise using Danterr Heat Welding Equipment comprising of an adjustable welding jig and heating blade. The ends of the waterstop are cut square and placed into the adjustable jig. The ends of the waterstop then slide up against the heating blade and bring the two ends together until the molten ends of the PVC fuse. When ordering welding equipment, please advise profile number of waterstop required.

HEALTH & SAFETY:
Joining of PVC Waterstops is performed by heat welding which results in the discharge of hydrogen chloride mist and vapour. In confined spaces or in still air conditions, the use of a ventilation fan or a suitable respirator should be adopted.

WRITTEN SPECIFICATIONS

Where shown on the drawings all PVC waterstops shall be as supplied by Danterr. Provide factory made waterstop fabrications for all changes of direction, intersections and transitions leaving only straight butt joined splices for on-site fabrication.

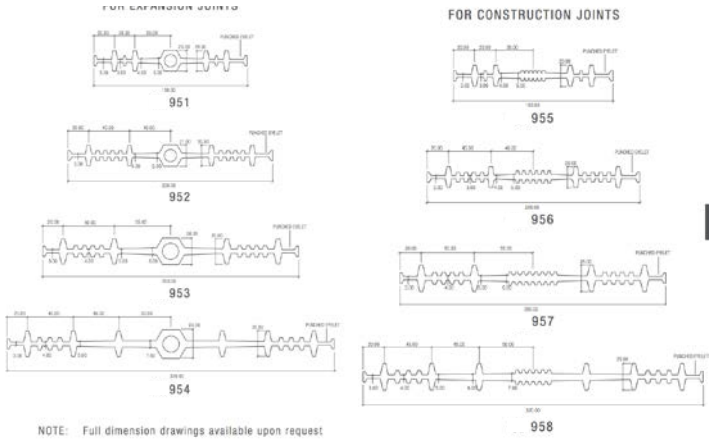

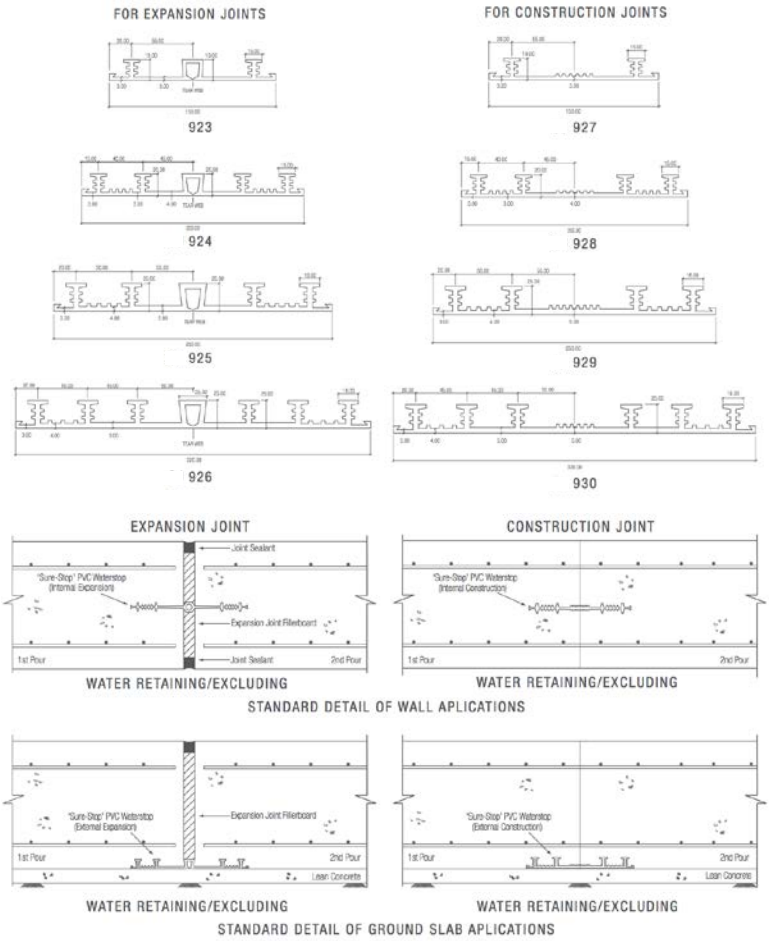

FACTORY - MADE INTERSECTIONS

Where shown on the drawings all PVC waterstops shall be A wide range of standardized prefabricated intersection pieces are a vaiable allowing easy site welding of butt joints to PVC Waterstop junction pieces. Customised pieces can be made to suit. In such cases, drawings must be provided giving exac t dimensions and jointing details.

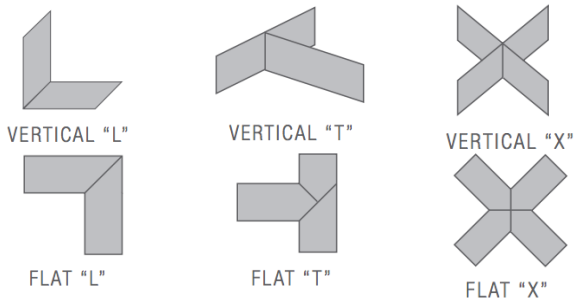

The information and the recommendations relating to the application and end use of this product are given in good faith and are based on the information provided by the manufacturer of the product and / or the Company's current knowledge and experience in connection with the product when properly stored, handled and applied under normal conditions and no liability of final function at the job site is assumed. In practice, the differences in materials, substrates and actual site conditions are such that no warranty in respect of merchantability of or fitness for a particular purpose, nor any liability arising out of any legal relationship whatsoever, can be inferred either from this information, or from any written and / or oral recommendations, or from any other advice offered by the Company. No responsibility or liability by the Company will be accepted for misuse, misreading or derivation from the recommended guidelines in respect of this product and the user shall determine the suitability of the product for his intended use and assume all risks and liability in connection therewith. The information contained in this brochure may change at any time without notice.